Satellite XLE

CNC machining centres

CNC 5-axis machining centre with mobile gantry, built for milling, drilling, threading and cutting large bars in aluminium, PVC, light alloys and steel. The mobile part of the machine is composed of a drive gantry on a high precision rack. The (11 kW in S1) electrospindle with HSK-63F toolholder allows performing machining operations, even heavy-duty ones, with optimal results in terms of speed and accuracy. The new local guarding cabin has been designed to offer optimal functionality, accessibility and lighting while fulfilling safety and ergonomics requirements. Large glass windows allow the operator to monitor the machining operations being executed and, thanks to the cabin complete opening system in two separate sections, also an easy access during cleaning and maintenance phases. An 18-place tool magazine is housed inside. The 450 mm blade tool is housed separately inside a dedicated magazine. SATELLITE XLE features new motorised vices that, in double machining mode, position themselves independently and in concurrent operation time to the machining processes of the spindle in the opposite work area. The compact and strong vices can be easily configured without the use of tools for geometric adjustments. The new stops allow full coverage of the work area and disengage the area in case of machining on the profile heads. All CNC axes are absolute and do not require resetting upon machine restart.

Emmegi S.p.A.
Via Archimede, 10
41019 - Limidi di Soliera (MO)
ITALY

Tel +39 059 895411
Fax +39 059 566286
P.Iva/C.Fisc 01978870366
info@emmegi.com
www.emmegi.com

The right to make technical alterations is reserved.

Cabin

The local guarding cabin has been designed to offer optimal functionality, accessibility and lighting while fulfilling safety and ergonomics requirements. The innovative and refined design makes the machine unique and unmistakeable. The large glass windows allow the operator to easily and safely control the execution of the machining operations.

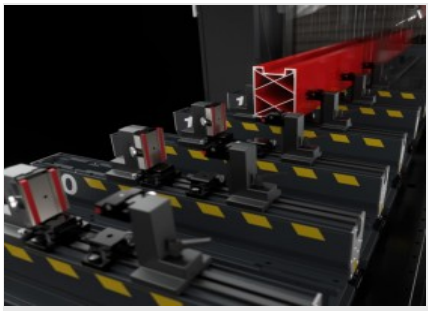

Motorised vices

The vice unit can ensure the correct, safe and fast clamping of large profiles and does not require tools for its geometric adjustments. Each unit slides on linear guides on machine surface. The motorized vices, each equipped with its own motor, can be positioned independently in the work area.

Tool magazine

The 18-place toolholder magazine is installed directly on machine gantry; its rear position, in a dedicated area, ensures maximum protection from machining swarf. The rotary base magazine provides maximum reliability, quiet operation and cycle optimisation. A milling disc with a diameter of 250 mm can be housed in the toolholder magazine.

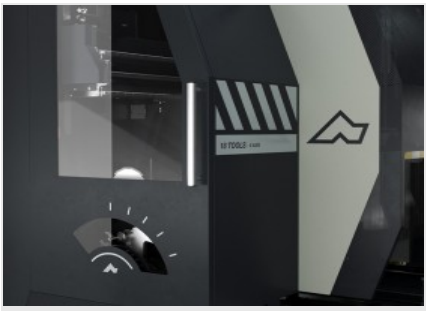

Blade magazine

The blade tool, with a maximum diameter of 450 mm, is housed in a dedicated magazine separate from the other tools. It is equipped with HSK-63F toolholder and can work by exploiting the 5 interpolated axes of the electric head to section the workpiece. By means of a suitable optional software, it allows cutting and separation directly from the unmachined bar.

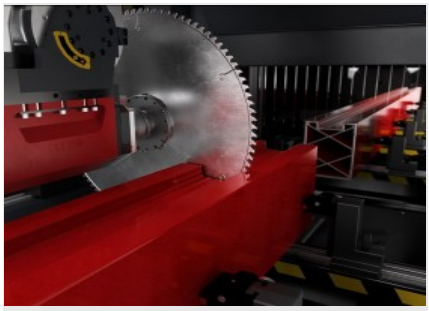

Cut and separation (Optional)

The optional cut-and-separate feature allows obtaining several machined and separated profiles from a single bar, avoiding the need to cut the different pieces in advance. The large cutting capacity of the blade unit allows separation cuts on large profiles. The machine can be equipped with a label printer to optimise profile management in the following phases.

Dimensional profile measurer (Optional)

The machine can be optionally equipped with an electronic device that automatically corrects workpiece dimensional errors in length, width and height. In this way, the accuracy of the machine is not influenced by the differences between theoretic and actual workpiece dimensions during machining.

Emmegi S.p.A.
Via Archimede, 10
41019 - Limidi di Soliera (MO)
ITALY

Tel +39 059 895411
Fax +39 059 566286
P.Iva/C.Fisc 01978870366
info@emmegi.com
www.emmegi.com

The right to make technical alterations is reserved.

LAYOUT

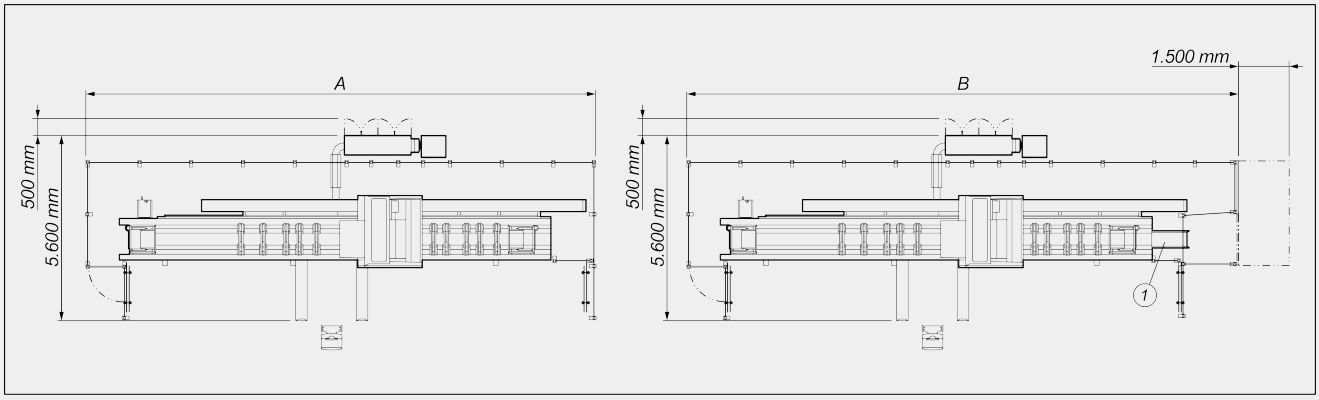

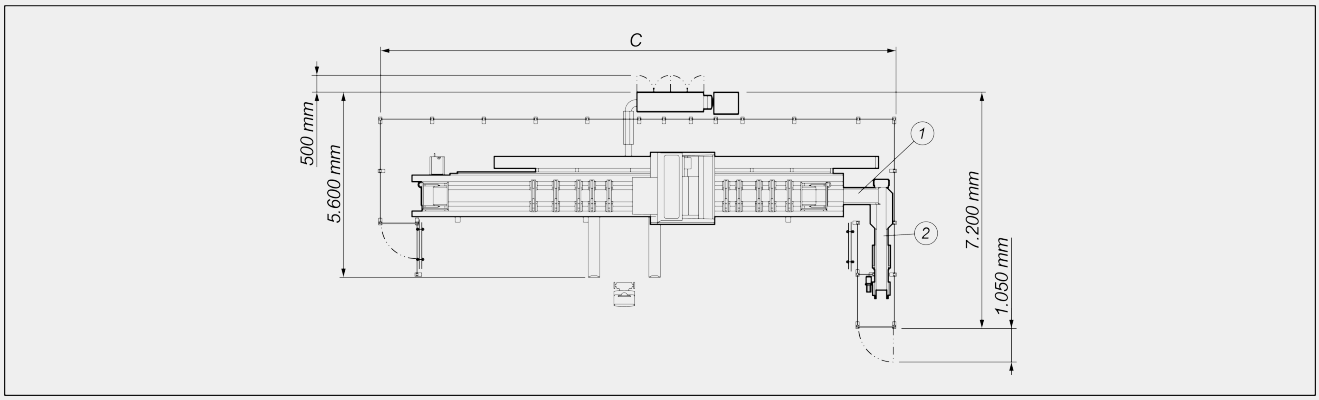

	A	B	C
Satellite XLE - 7,8m (mm)	12.800	14.000	12.900
Satellite XLE - 10,5m (mm)	15.300	16.600	15.400

1. Metal mesh swarf evacuation belt with outlet to the right (optional)
2. Belt for conveying swarf and short cuts to collector bag(optional)

The overall dimensions may vary depending on the product configuration.

Emmegi S.p.A.
Via Archimede, 10
41019 - Limidi di Soliera (MO)
ITALY

Tel +39 059 895411
Fax +39 059 566286
P.Iva/C.Fisc 01978870366
info@emmegi.com
www.emmegi.com

The right to make technical alterations is reserved.

AXIS STROKES

X AXIS (longitudinal) (mm)	7.800 ; 10.500
Y AXIS (transversal) (mm)	1.090
Z AXIS (vertical) (mm)	640
B AXIS (head vertical-horizontal rotation)	-15° ÷ +90°
C AXIS (vertical axis rotation of the head)	-360° ÷ +360°

POSITIONING SPEED

X AXIS (longitudinal) (m/min)	75
Y AXIS (transversal) (m/min)	54
Z AXIS (vertical) (m/min)	60

ELECTROSPINDLE

Toolholder cone	HSK - 63F
Maximum torque (Nm)	8,8
Maximum speed (rpm)	24.000
Maximum power in S1 (kW)	11

AUTOMATIC TOOL MAGAZINE ON BOARD THE GANTRY

18-place tool magazine	●
Maximum dimension of the tools that can be loaded into the magazine (mm)	Ø = 80 - L = 190
Maximum size of the blade that can be loaded into the magazine (mm)	Ø = 250 - L = 95 ; Ø = 180 - L = 150
Size of blade that can be loaded onto the blade magazine (mm)	Ø = 450 - L = 73

WORKABLE SIDES

With direct tool (upper face, side faces, heads)	5
With blade tool Ø 450 mm (upper face, side faces, heads)	1 + 2 + 2

Emmegi S.p.A.
Via Archimede, 10
41019 - Limidi di Soliera (MO)
ITALY

Tel +39 059 895411
Fax +39 059 566286
P.Iva/C.Fisc 01978870366
info@emmegi.com
www.emmegi.com

The right to make technical alterations is reserved.

WORK AREA

1F = 1 face machining **5F = 5 faces machining**

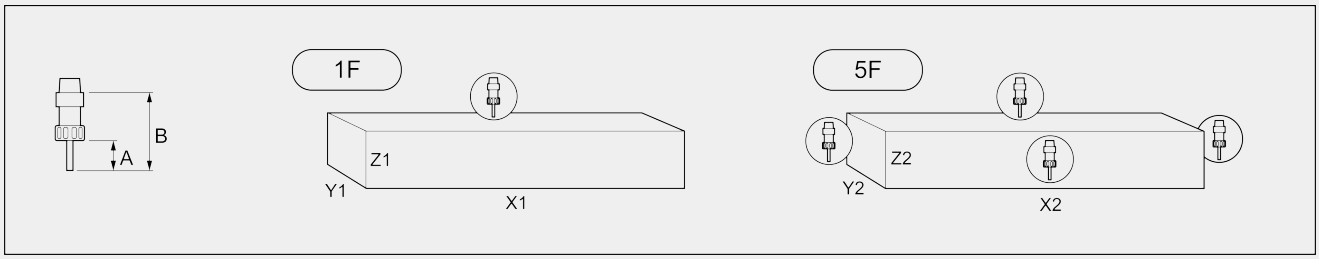

		A	B	X1	Y1	Z1	X2(*)	Y2	Z2
SATELLITE XLE 7.800	single mode	75	145	7.800	600	350	7.400	600	350
	double mode	75	145	3.130	600	350	2.930	600	350
SATELLITE XLE 10.500	single mode	75	145	10.500	600	350	10.100	600	350
	double mode	75	145	4.480	600	350	4.280	600	350
Ø 450 mm blade machinable section (separation cuts from rough bar included)					290	250		290	250

Dimensions in mm

(*) profile end milling with blade Ø 450 mm: X2 dimension reduction equal to 400 mm in single piece mode; 200 mm in double mode

TAPPING CAPACITY (with Tap On Aluminium And Through Hole)

Rigid	M10

WORKPIECE LOCKING

7,800 mm versions; standard number of pneumatic vices	8
7,800 mm versions; maximum number of pneumatic vices (*)	12
7.800 mm versions; maximum number of vices per area	6
10,500 mm versions; standard number of pneumatic vices	10
10,500 mm versions; maximum number of pneumatic vices (*)	14
10,500 mm versions; maximum number of vices per area	7

(*) The dynamic version with a number of vices higher than 10 requires the high-performance HMI industrial PC (optional)

Included ● Available ○

Emmegi S.p.A.
Via Archimede, 10
41019 - Limidi di Soliera (MO)
ITALY

Tel +39 059 895411
Fax +39 059 566286
P.Iva/C.Fisc 01978870366
info@emmegi.com
www.emmegi.com

The right to make technical alterations is reserved.